7. DIAGNOSTIC STUDY

7.1 Purpose of a diagnostic study

After identifying the under performing cluster(s) to be assisted, the task of the implementing agency is to obtain a more in-depth picture - to identify the cluster(s) strengths and weaknesses, the environment in which it or they operate and the steps to be undertaken for sustainable development. This information is obtained through the diagnostic study of cluster (s). It is important to stress that, in a complex and highly interdependent environment such as an SME cluster, no one-off study can be expected to identify all relevant aspects. A diagnostic study provides a broad framework, which will need to be regularly fine-tuned and revised with the stakeholders. In a nutshell, the objectives of a cluster diagnostic study are to:

- Understand the socio-economic environment of the cluster;
- Identify the most effective leverage points for intervention;
- Provide a baseline for future monitoring and evaluation;
- Build initial trust with and among the stakeholders.

Building on the findings of the diagnostic study, and working with the cluster stakeholders, a vision for the cluster and a strategy to achieve it and the cluster action plan will be drafted (the vision and the action plan will be discussed in Sessions 8 and 9).

7.2 Who will do it?

Depending on the complexity of the cluster, the diagnostic study can be made by a small team or a single consultant. After completing the diagnosis, the consultant or the team (or at least its senior professional) can act as facilitator in drafting, validating with stakeholders, and initiating the implementation of the cluster action plan. The CDA should preferably be appointed before the diagnostic study, so that (s) he can be a part of/supervise the exercise.

7.3 Steps in cluster diagnosis

Before introducing the research agenda that lies at the core of the diagnostic study, it may be useful to recall that an SME cluster can be a very complex environment. It contains firms as well as a range of other stakeholders. It is crucial that the CDA and the entire team that undertakes the diagnostic study are fully aware that the study may be a very complex one. The diagnostic study will uncover interdependencies that have never been noticed by the cluster stakeholders before. The steps can be summarized as follows:

- Collect basic data about the cluster (number, type and size of firms, types of product, location);

- Analyse the business segment in which the cluster operates;
- Conduct interviews with representative samples of the principal firms (SMEs), other cluster firms, support institutions and SME associations;
- Make an appraisal of the cluster's structure;
- Make an appraisal of the strengths and gaps in services provided to the principal firms (SMEs);
- Make a diagnosis of the governance structures;
- Combine these analytical steps in an overall diagnosis and summarize the challenges and opportunities faced collectively by the principal firms (SMEs).
- On completion of the Diagnostic Study one should also draw up a cluster map that reflects the relationship dynamics of stakeholders with the principal firms.

The completed diagnosis should provide the basis for a cluster vision and strategic plan, which will be discussed in Session 9.

7.3.1 Collect basic data about the cluster

This part of the exercise can be based on the information collected during the cluster selection phase. The checklist in Table 6.2 in Session 6 can be used to explore specific aspects of the cluster in more detail.

7.3.2 Analysis of the business segment

In the current globalise markets, even those SME clusters, producing traditional products face continuous, strong pressures due to changes in technology, competition and market regulation. For example, in traditional rural metal or clothing sectors, SMEs producing for local markets may find those markets swept away by changes in agricultural techniques, by customers moving upmarket as they become more prosperous, or by cheaper and/or superior incoming urban or imported products.

For this reason, it is important that, prior to extensive fieldwork, the diagnostic team should become familiar with the broad environment in which the cluster operates, which in turn entails the following steps:

- Identify the market segment in which the principal firms operate and study the characteristics of and trends in:
    - Size, location and product requirements of national and international markets;
    - Market shares by product;

- Size, location and strategies of the main competitors in the national and world economy;
- Type of technology used by product type;
- Supply conditions of other major inputs (e.g. skills, raw materials, components, energy);
- Any other significant features of the business segment, such as the influence of trading blocs and environmental issues.

- Identify a few (one/two) performing clusters operating elsewhere under near comparable conditions and study relevant characteristics such as their size, product range and methods of adding value to products, market share by product type, types of stakeholder, major markets, technologies used and strategies of the lead firms. Here one can even take a preliminary stock of the various performing and lead agencies and their areas of operation, major activities, etc. over the years and at present.

Sources of information can be surveys and censuses, national and international trade statistics, general and sectoral newspaper/magazines, speeches by industry leaders/agency chiefs, publications of national/international product associations/councils and the internet.

This preliminary study (which should not exceed a week of full-time work) may be contracted out. It is crucial that the information gathered is as up-to-date as possible.

7.3.3 Selection of samples and setting up interviews

After completing the preliminary analytical work, the field interviews must take place. It is crucial that representatives of *all* stakeholders are interviewed. Field practice suggests that the great majority of interviewees should be representatives of the principal SMEs, with a few interviewees representing large and supplier firms, support institutions, associations and/or networks. In addition, one or two policy makers and one two persons who know the cluster and the industry as a whole really well, should be interviewed. For a single individual, it is realistic to assume that three to four interviews can be carried out in a day.

Ideally the process should start with a meeting with an association executive and/or a knowledgeable person. It can provide general insights of the different types of firms and their performance. This information can complement information from secondary sources gathered in the first phase to make a representative sample of firms. While a balanced picture of the cluster is essential for a good impression of its character, potential and problems, the selection should largely include the more dynamic enterprises as these may help to identify ways forward for the cluster as a whole.

Interview schedules should preferably mix stakeholder types, to facilitate cross-checking of information and focus later interviews. The entire process should conclude by interviewing a knowledgeable person who can provide (a) insights on issues that have remained unanswered and (b)

ideas about a vision and/or broad objectives to be pursued, a broad picture of which starts germinating within the mind of the interviewer (e.g. the CDA) by that time.

The CDA and the team should keep in mind the following points when meeting firms and institutions:

- The diagnostic study is NOT a formal survey.
- It is better to have in-depth discussions with relatively few enterprises and institutions, and cross-check issues, processes and insights than to obtain complete but mechanical responses from the maximum number of enterprises or the full range of institutions.
- Limiting the number of topics helps to have an insightful, structured analysis.
- Topics should not necessarily be introduced in the order of the format, but rather as dictated by the flow of the discussion.
- The interview should not last more than 90 minutes. Experience indicates that most people dislike longer interviews.
- Each interview (discussion and findings) should be recorded in a visit report. However, it is important to concentrate on the interview rather than on making notes – the report should not be drafted during the interview!
- On the basis of the information gathered from various stakeholders, a cluster map needs to be drawn up which summarizes the relations among the different stakeholders.

7.3.4 Interviews with principal SMEs

The aim of interviews with SME owners in this sample is to gain an in-depth impression of the actual business environment in which the SMEs producing the typical products of the cluster, operate (which is often very different from what secondary sources may suggest). All their main business functions, business relations and wishes for further development of business-related services should be covered.

The basic interview format/visit report is displayed at the end of the session notes (Handout 1). The following points should be remembered when interviewing SMEs:

- Concentrate on qualitative information. Attempts to collect detailed quantitative data distract the interviewer from the goal and alienate the interviewee.
- However, basic information should be acquired on total employment and/or investment, percentage of sales abroad, amount of credit obtainable from suppliers or a bank.

- Questions may serve as "markers" for topics or lines of enquiry to be pursued in more detail if this helps to provide more insights into the particular SME being interviewed.

Box 7.1: Going in-depth in a particular area

Questions about machines, for example, introduce the whole topic of equipment supply. Where were the machines manufactured? How did the enterprise select them? What alternatives did it consider, and why did it choose the machines actually employed? Were they bought directly from the manufacturers, or from local dealers or second-hand from other enterprises? Are these dealers specialists in equipment or this type of equipment? Are they part of or close to the cluster? Were the machines bought as standard 'off the shelf' items, or were they customised by the suppliers or by the enterprise itself? etc. Do they provide after sales service? Are such services available easily in the cluster?

- The team should tour the production and storage facilities at the start of the visit. This can reveal features and complexities of the enterprise that might not come out in a discussion.

7.3.5 Interviews with other enterprises

The commercial relationships of the SMEs with other enterprises in the cluster, considered collectively, constitute the cluster's *industrial organization*, whose features go a long way towards explaining the cluster's innovativeness, dynamism, and growth (or lack thereof). The selection of these enterprises can take place on the basis of previous information about business links with the SMEs, or references to linkages during interviews of the first few SME samples.

In contrast with the interviewed principal SMEs, there is no need to get a full picture of the operations of this type of stakeholders – unless there are small enterprises among them which were specially mentioned in the course of the SME interviews, because of their particular relations with one or more of the principal SMEs.

The types of enterprise to be interviewed include:

- Large lead firms;
- Traders, export agents and exporters;
- Suppliers of inputs, equipment, technical and marketing services;
- Specialized BDS providers;
- Fellow-SMEs not covered by the first sample, which are found to be of particular importance.

The business interactions of these enterprises with the SMEs will normally be very diverse. It is neither practicable nor necessary to specify separate interview formats for all of them. A sample

format is given below for interviews with larger manufacturers (Handout 2), to illustrate the principles involved. The team can apply these principles to interviews with the other types of enterprise.

7.3.6 Interviews with local and national institutions and SME associations

As in the previous case, interactions with the SMEs in the cluster should be the focus of discussions. There is no need for a full picture of their operations, apart from basic information giving a perspective on their relations with the SMEs. The institutions to be included are:

- Export promotion agencies;
- Agencies responsible for sub-contracting programmes;
- Technological and training institutes, local universities;
- Agencies providing serviced land, premises, common service facilities and advisory services; Providers of utilities;
- Financial institutions;
- SME and other relevant industry associations;
- Relevant government agencies (Ministry of Industry, taxation authorities, local government departments, etc.).

A sample format for interviews with SME associations is shown in Handout 3, to illustrate the principles. These can be applied to interviews with all stakeholders in this category. As in the previous case, selection may be based on prior knowledge of links with the cluster or references made to the institutions by the one or more of the sampled SMEs.

7.3.7 Appraisal of the structure of the cluster

When all this information has been collected, the draft appraisal of the cluster is prepared. This is the first attempt to single out the elements on which a consensual development vision for the cluster can be based (the creation of such a vision will be discussed in Session 8). The focus is on the operations and typical enterprise strategies of the SMEs and the nature and strength of business interactions within the cluster – in short on the industrial organization. Together, these will reveal the scope and dynamism of the cluster.

The two main headings are therefore:

- SME enterprise strategy.
- Inter-firm industrial organization.

SME strategy

The purpose here is to identify the operational and competitive strategies of the principal SMEs, to understand how they manage their central business functions (production, marketing and finance) and what their strengths and weaknesses are. Innovative working-methods and procedures, if any, should be emphasized. These include:

- Improvement of products and processes;
- Development of new markets and customers;
- Specialization;
- Upgrading labour force skills;
- Replacing, upgrading and adding factory equipment, and
- Tapping new financial resources.

The pattern of outcomes is crucial to the design of the cluster action plan.

Inter-firm industrial organization

This of course includes the conventional exchanges of money, goods and routine services. A matter of special interest in the appraisal of inter-firm relations is how far, and in what ways, these relations include elements of jointly learning about markets, products, designs, processes, and the uses and sources of materials.

Of particular interest are forms of industrial organization in which the SMEs and/or their "enterprise-associates" have made deliberate cooperative efforts to foster the transfer, exchange, or practical absorption of information. A large manufacturer or exporter may, for example, have developed and harnessed the productive or design skills of its suppliers; an SME meeting a business contact's order may have made a point of learning as much as it could about that contact's final customers and their requirements.

This appraisal should cover not only the present state of interactions between enterprises but also the main features of their past development or of landmarks in the cluster's history. Knowledge of the past can significantly add to the understanding of the cluster's present functioning and its potential for further development, as the example in Box 7.1 shows. Such brief accounts can also provide an excellent complement to the analysis of the business segment.

Box 7.2 The development of the Daska metalworking cluster

The small town of Daska in Pakistan has for several decades been a thriving centre of metalworking. A cluster of several hundred SMEs employing thousands of people has emerged. The cluster originally

produced low-speed diesel irrigation pumps, through an intricate system of specialist inter-enterprise subcontracting of production and assembly.

In the early 1980s, the market for these pumps was sharply reduced by the introduction of high-speed diesel pumps, which the Daska SMEs could not manufacture. At about the same time, the large-scale Pakistani tractor manufacturers were facing cost-reduction pressures, which induced them to look for ways of outsourcing the production of certain components. An arrangement of mutual commercial advantage developed with the Daska SME Association, which obtained the orders and allocated them among its members.

As confidence grew on both sides, the large manufacturers have come to deal mostly with individual SSI suppliers and/or small, tightly knit supplier groups. This is not the only way the Daska SMEs have diversified. Some of them are now manufacturing metal-based consumer durables, on much the same basis of inter-SME process specialization as they used in producing low-speed diesel pumps. Their relations with the large tractor manufacturers have significantly broadened the Daska SMEs' markets and technical horizons.

7.3.8 Appraisal of support services

This appraisal will be based on interviews conducted with support institutions or private BDS providers, supplemented by comments by SMEs on the services provided by the institutions.

The appraisal should cover the following questions:

- Which useful business services are provided by institutions and commercial providers; how do they complement each other?
- How are these services organized; is there cooperation with the principal SMEs?
- What are the crucial weaknesses and gaps in these services – in terms of outreach, quality, cost, sustainability, or relevance – as perceived by the SMEs in the cluster and/or the team?

7.3.9 Assessment of the governance structures

The governance structure is easily identified and analysed in clusters that perform well, where more or less institutionalised frameworks exist to represent the various interests and demands of the cluster actors as well as to identify, prioritise and address the challenges faced by the cluster as a whole. The governance structure in a performing cluster consists of presence of industry associations/consortiums and technical/financial institutions, which play a pro-active role in the development of the business environment of the cluster. Besides there is close co-operation among these associations and institutions. The cluster also has various specialised service providers with close linkage with the firms and the associations/institutions. Such institutional mechanisms are not always fully formalized. There may be strong informal bond among a group of firms. Performance of the cluster depends to a great extent on the strength of relationships

among various stakeholders who have learned to communicate effectively to address the ever-emerging set of problems/opportunities in the cluster.

In under performing clusters such structures are weak or absent. During the field interviews but also after the appraisal has been drafted and cross-checked with the various cluster actors, the team should pay particular attention in identifying whether any structure(s) exist on which governance capacity, in terms of an organized capacity of cluster stakeholders to jointly react to challenges, can be built. In the absence of these, the diagnostic study must establish which type of governance system would be suitable, whether it would have the support of the key stakeholders, and which resources it would require.

4.3.10 Overall diagnosis and SWOT

Having completed the different steps of information collection, the team prepares the overall diagnostic report on the cluster, with the following structure:

a) **Development context:** (1) A brief description of national and international markets for the typical product(s) of the cluster and the trends in those markets. (2) A brief description of one benchmark cluster and lessons thereof.

b) **History and turning point**: Presents the evolution of the cluster over recent years. The capabilities of the cluster to grow, compete and innovate should be highlighted. This part indicates the extent to which the cluster has been able to improve its products and processes, to enter new product markets and to broaden/deepen its production system.

c) **Description of the cluster:** A brief summary description of the cluster as a whole in terms of location, product markets, number and size of firms, employment, etc.

d) **Analysis of business operations – the SME strategy**

- Presents the different business segments of the cluster and, for each business segment, the main customers and competitors. An indication is provided of the key purchasing criteria of the customers and the main technologies;

- Strategies, organization and capabilities of the core producing firms and their relations of competition and cooperation;

e) **Organization:** Describes how the cluster is organized, focusing in particular on the features which might explain the evolution of competitiveness and innovation. Of particular importance are the following elements:

- Organization of the system of production and distribution, and in particular the relationship between core producing firms, buyers and suppliers, and their cooperation in the improvement of products and processes;

- Description of the support system (marketing, technical and financial services). The role of intermediary institutions and associations in the organization of the cluster support system can be described here, as well as the role of regulatory agencies.

- This relationship can be summarised into a cluster map (see section 4.11 below).

f) **Social capital in action:** Summarises the intensity of linkages, its institutionalisation, in particular with regard to the ability of stakeholders to respond to new challenges and opportunities through formulation of strategies and implementing joint activities to improve the organization of the marketing, production and other typical support systems of the cluster.

The diagnosis can be summarized in a table showing the strengths and the weaknesses, the opportunities and the threats of the cluster. This is the SWOT analysis.

Table 1 Model for SWOT analysis

	Current situation		**Future**	
	Strengths	**Weaknesses**	**Opportunities**	**Threats**
Markets				
Technology				
Inputs				
Innovation				
Skills				
Business environment				

On the basis of the above, the diagnosis should conclude with:

g) **Vision, strategy and activity suggestions:** An outline of the vision, strategy and activity suggestions comes out of the study and opens a "growth window" for the future and motivates the clients – the cluster stakeholders – for further action. The suggestive action plan (including broad groups and some activities) can be derived based on the SWOT and chances of achievability of the same, as understood by the study team.

Box 3 Diagnostic study checklist for CDAs

- Get acquainted with the interviewees
- Interview length: around 90 minutes
- Questions should preferably be qualitative
- Collect as much secondary information as possible a priori so as to pose focussed questions
- Start by interviewing an association of principal firms and a knowledgeable person from any stakeholder category who knows the cluster well
- Use information received during earlier interviews to further sharpen questions
- Record the main results of the discussions *after* the interview
- Interview a mix of stakeholders to facilitate cross-checking
- Conclude the interviews with a discussion with someone (from any stakeholder category) who knows the cluster well.

4.4 Cluster map

The development of a cluster has multiple dimensions. As will be evident from the SWOT analysis of a cluster, it may include increasing turnover, establishing new markets, enhancing production efficiency, improving environmental conditions, etc. However, creation or improvement of linkages among stakeholders can be the key to progress in any front. For example, in order to establish new markets, competing firms may need to first agree to create a network and liaise with a range of other stakeholders like institutions, BDS providers, new suppliers, new customers, etc. These new linkages add to the social capital of the cluster and provides a governance structure, which again is the basis for undertaking new activities.

4.4.1 Need for a cluster map

Cluster map provides a summary diagrammatic description of (a) types and number of stakeholders involved, (b) nature of linkages of various stakeholders with the principal firms and (c) strength of such linkages.

The map drawn at the time when an agency starts working in a cluster is called the *current cluster map*. The cluster map projected by the agency at the conclusion of the project is the called the future *cluster map*. The visual difference of these two cluster maps provides information about linkages that need to be developed, critical stakeholders who need to be created/implanted in the cluster, the links that need to be created thereafter, etc.

Cluster map is also a very useful tool to demonstrate to cluster stakeholders, related institutions and policy makers regarding the importance of "linkages" in cluster development.

4.4.2 Techniques for drawing a current cluster map

A cluster map can be made with six modules, and is centred around the principal firms to which all other modules are linked, as shown in Figure 4.1.

Cluster map is to be inserted.

The *tools used* for drawing a cluster map are shown in Table 4.2.

Table 4.2: Tools for drawing a cluster map

A thin-bordered rectangular box for a *group* of stakeholders. The firms in a group are near similar and are not necessarily linked to each other	
A thick/dotted-bordered rectangular box for showing a well/poorly functioning *network* of inter-related stakeholders	
A thick/dotted one-sided arrow to show a well/underdeveloped linkage between two stakeholders (or network of stakeholders); the point of the arrow meets the stakeholder that receives goods/services from the other stakeholder	
A thick/dotted two-sided arrow to show a well/underdeveloped linkage between two stakeholders that have a subcontracting relationship	
Parenthesis to show the number of stakeholders in a group/network	**( )**

The modules are filled and interconnected as follows:

1. Principal production system

- Group the principal firms by size - large/medium/small - or by market - manufacturers for domestic markets/exporters, etc. - in thin-bordered rectangular boxes. Give the group a name or an acronym and put the number of firms in each group in parentheses in each box.
- Present the network of firms in dark/dotted boxes. Give each network an acronym.
- Link the groups/networks of principal firms if there is a subcontracting relation between them.

2. Subcontracting system

- Present the groups of sub-contractors in thin-bordered rectangular boxes. Write their names/acronyms and number of firms in parentheses.
- Present the network of firms of sub-contractors in dark/dotted boxes. Write the name/acronym.
- Present the links (if any) of the groups/networks of sub-contractors among themselves.

- Link up the networks/ groups of subcontracting units with those of the networks/groups of principal firms.

3. Raw material/machinery supplier

- Present the groups of input providers in thin-bordered rectangular boxes and link them to the groups/networks of principal firms.
- Draw the groups' networks (if any) of the raw material/machinery supplier and link them with the groups/networks of principal firms.

4. Forward linkage: the marketing network

- Present the groups of market providers in thin-bordered rectangular boxes and link them with the groups/networks of principal firms
- Draw the groups' networks (if any) of the market providers and link them with the groups/networks of principal firms.

5. Private BDS providers

- Present the groups of private BDS providers or a single BDS provider in thin-bordered rectangular boxes and link them with the groups/networks of principal firms.

6. Institutions

- Present the various institutions in thin-bordered rectangular boxes and link them with the various groups of principal firms and their networks.

Information required to draw a current cluster map

- Principal firms by type (small/medium/large): Number, turnover, sources of raw material, major markets, marketing channels, etc., status of linkages with other stakeholders (production, distribution, marketing, technical, financial and support system), and networks of principal firms.
- Support firms: Number, and status of linkages within the network of support firms and their nature of linkages with group/networks of principal firms. This information is required for each category of support firm.
- BDS provider: Type, number and status of linkages with networks/groups of principal firms.
- Institutions: Names and status of linkage with (networks/groups of) principal firms.

Information required to draw a future cluster map:

- Principal firms by type (small/medium/large): Projected changes in macro variables, new markets/marketing channels envisaged, new networks planned and change in status of linkages with any stakeholder and networks (of principal firms).
- Other stakeholders: New categories planned, their projected linkages among themselves (networking) and with principal firms; projected changes in number and status of existing stakeholders and linkages within their network/groups and with networks/groups of principal firms.

To draw the future cluster map, superimpose the expected new stakeholders on the current cluster map, link them with the existing stakeholders, present the new networks, link them with the existing networks and change the status of linkages both among the existing stakeholders and between groups/networks of stakeholders wherever required.

4.4.3 How to "measure" linkages

Some qualitative indications of the current status of linkages between group/network of principal firm with an individual/group/network of other stakeholders are presented in Table 7.3

Table 4.3 Status of links between stakeholders

Strong	**Weak**
1. Relationship between a group/network of principal firms and a group/network of support firm(s)	
• Support firms have developed a niche in a product/service • Principal firms are fully dependent on support firms for this product/service • Principal firms depend on support firms for continuous innovation in this product/service to remain competitive • There is a continuous growth of support firms in the cluster	• Principal firms sub-contract/source a product from support firms to reduce cost • Major changes in that product/service come from outside the cluster • Support firms engage in price based competition to get subcontracting orders • Profitability of support firms is decreasing
2. Relationship between a group/network of principal firms and a group of BDS provider(s) or a single BDS provider	
• Principal firms are regular users of the services of the BDS providers • BDS providers have specialized • BDS providers are creating external service providers by creating and delivering new training programmes • BDS providers have grown in size and number	• BDS providers are rarely used • BDS providers do business with different types of firms • BDS providers are very secretive about their trade • BDS providers are not growing
3. Relationship between a group/network principal firms and marketing channels	

• Principal firms contribute substantially in product conceptualisation • The principal firms earn a premium return from the channel	• Principal firms simply carry out the processes as suggested by the channel • The channel does price based negotiation with the principal firm
4. Relationships within a network of principal firms	
• Regular interaction for business generation/developmental issues • Interaction generates business for the network members • Has opened up new areas of cooperation that were not initially envisaged by the network • Existing networks are increasing in size	• Infrequent interaction of members • Discussions on fiscal or regulatory issues • No or unimportant business related services • Number of active members is decreasing
5. Relationship of an institution with group/network of principal firms	
• Has regular interaction with (networks of) principal firms • Works on business/developmental issues with (networks of) principal firms • Actively promotes policy-related issues and introduction of new services • Institution grows by working with principal firms and new institutions become involved	• Infrequent interaction • The institution rarely visits the firms • The institution does not have any idea regarding the cluster's policy related issues • The institution does not depend on the growth of the cluster

4.4.4 Creating a hypothetical cluster map

The data required to draw a current cluster map is normally to be found in the diagnostic study. In what follows we first provide the information required for each module. By interconnecting these independent modules we generate the current cluster map (Figure 8). By superimposing information on future developments for each module we get the future cluster map (Figure 9).

Module 1

Current map: There are 50 *medium* (MF) and 250 *small* principal *firms* (SF). There is a formal and active *network* of 8 *medium firms* (NMF1). NMF1 has a subcontracting relationship with 20 *specialized small firms* (SSF1), does common *raw material* (RM1) sourcing, jointly employs the services of a *BDS provider* (BDS1) and carries out joint R&D with a *technical institution* (TI1). They have a network manager. There is an *association of small farms* (ASF), but it is dormant. The 'principal production system' of the current cluster map is shown below in Fig. 2.

Figure 4.2: Principal Production System

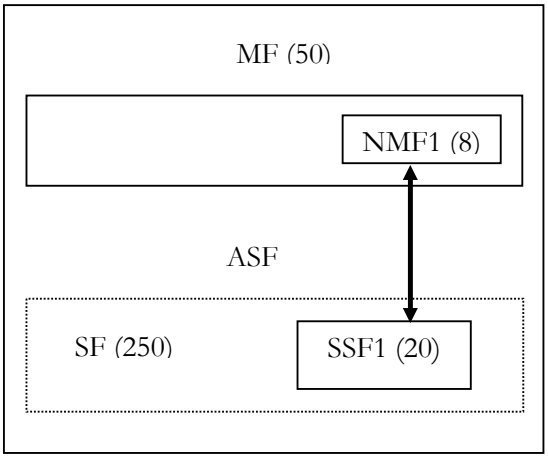

Module 2

Current map: There are two principal *sub-contractors*, SC1A (30 firms) and SC1B (60 firms). These sub-contractors treat semi-processed goods provided by the principal firms. There is a *sub-contractor* SC2 (10 firms), which processes a *raw material* (RM3) for SC1A. SC1A uses it to process to the semi-finished goods received from the principal firms. SC2 has a dormant *association* (ASC2) that only fights against reducing import duty on processed RM3. The 'sub-contracting system of the current cluster map appears in Figure 3 below:

Figure 4.3: Sub-contracting System

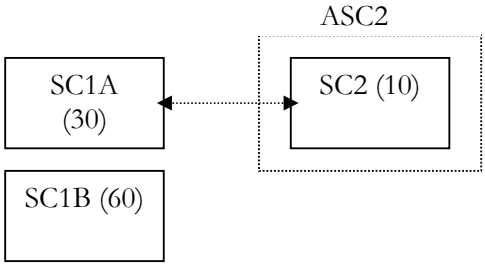

Module 3

Current map: There are 3 types of *raw material suppliers*, RMS1 (two firms supplying *RM1*), RMS2 (25 firms supplying *RM2*) and RMS3 (one firm supplying *RM3*). RM1 is procured only by NMF, RM2 by all principal firms and RM3 by SC1A. The raw material/machinery supplier system of the current cluster map appears in figure 4 below:

Figure 4.4: Raw material/Machinery supplier system

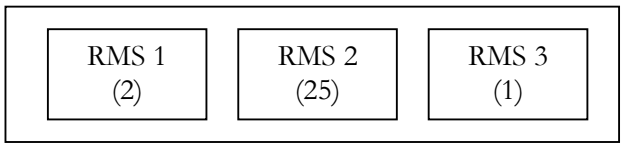

Module 4

Current map: NMF has access to *importing agents* IMPA (30 firms), which sell the goods to foreign departmental stores (FS) abroad. The MFs have direct linkage with *agents of department stores* (ADS) in the country, ADS (20 firms). The SSF1 have a linkage with ADS. ADS have an association (AADS) but it works only on fiscal issues. The small firms generally sell their goods to some 50 *traders* in the *local market* (LT). The *foreign stores* (FS) and *domestic stores* (DS) do not interact with the principal firms. The forward linkage section of the current cluster map appears in figure 5 below:

Figure 4.5: Forward Linkage

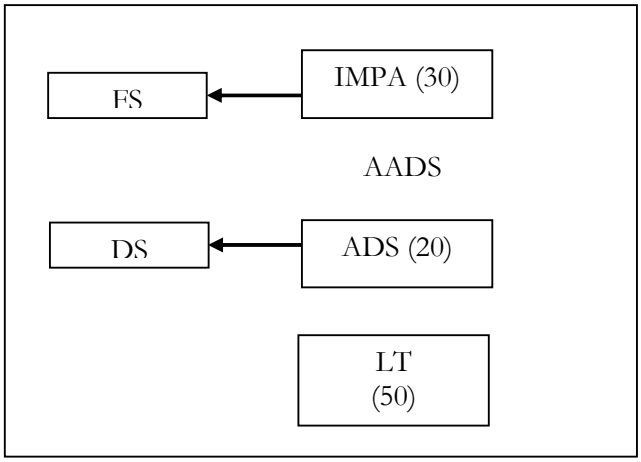

Module 5

Current Map: There is only one BDS provider (BDS1) whose services are used by NMF1.

Figure 4.6: Private BDS Providers

Module 6

Current map: There are few technical institutions (TI1, TI2 and TI3) and one financial institution (FI1). TI1 does some R&D jointly for firms of NMF. The other institutions are not active.

Figure 4.7: Institutional Linkage

The figures 4.2 to 4.7 are then interconnected to create the current cluster map, that appears in figure 4.8 below.

CURRENT CLUSTER MAP

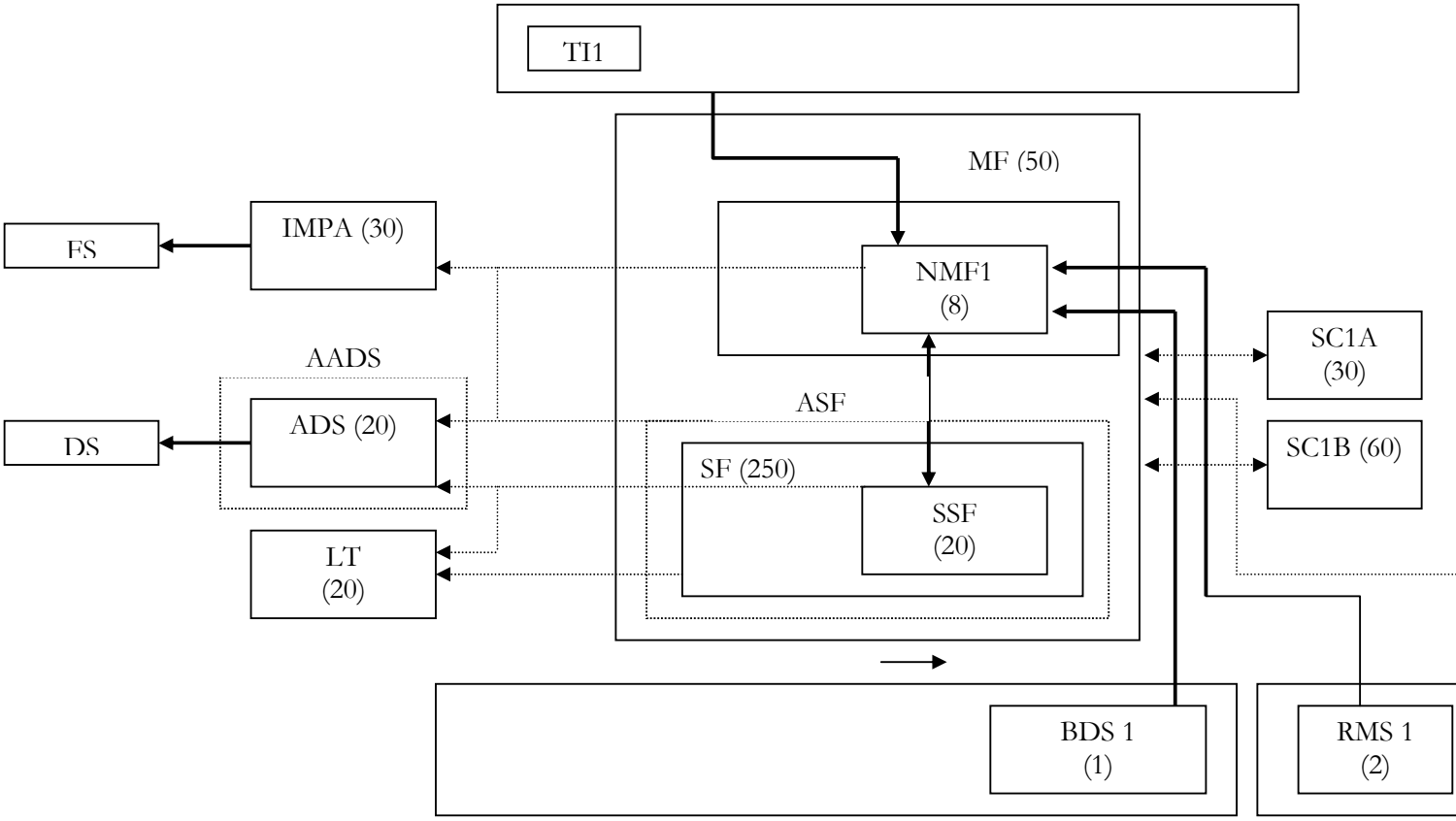

Based on the cluster aspirations and the desired needs as evident from the diagnostic study, the following issues were targeted for the future

- Two more networks of medium firms will come up. The number of specialized small firms will go up to 50 and there will be 4 networks of these firms. ASF will become active.

- All new networks of medium-size principal firms will have a strong relationship with SC1A and SC1A with SC2.

- All networks of SF and MF will have a strong relationship with AADS. The networks of MFs will create linkages with FS and DS and the networks of SFs will create a linkage with DS. AADS will become active.

- There will be 2 new types of BDS providers, BDS2 and BDS3. These will have linkages with the networks of small and large firms. The network managers in each network will promote joint service provision for each network. The number of BDS providers will also increase.

- The two remaining technical institutions and the financial institution will become active.

This information is then superimposed on the current cluster map to draw the future cluster map, which appears in figure 7.9 below.

FUTURE CLUSTER MAP

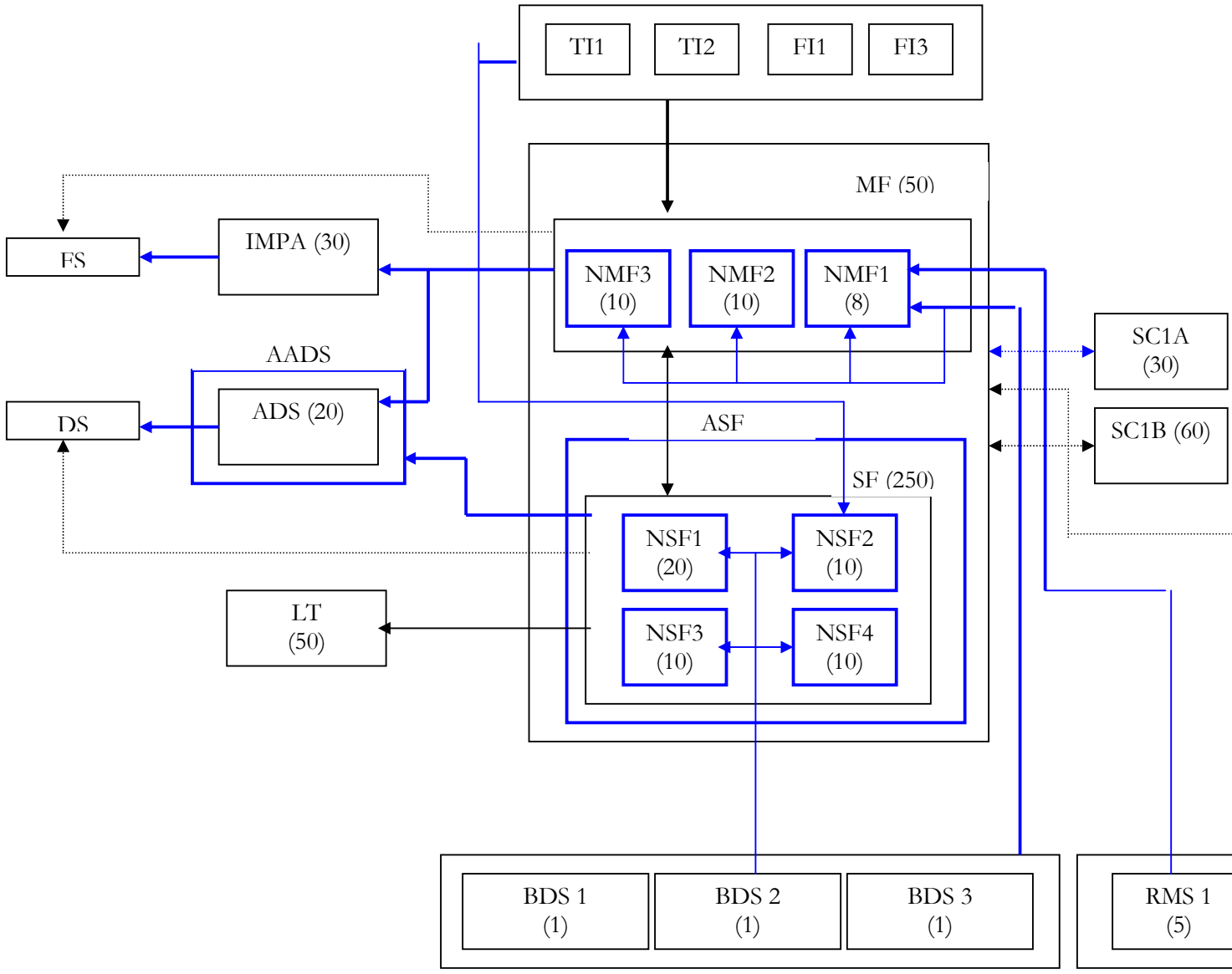

4.5 Special characteristics of a diagnostic study

A cluster diagnosis has an "open" character. Immediately after it is completed, it must validated through discussions with key stakeholders about the contents, the resulting vision and the suggested strategy, and these comments are incorporated. At a later stage, specific issues that have been identified as being important for the cluster, such as value chain analysis, marketing strategy, technology benchmarking, BDS profiling etc., may need in-depth studies. The need for these studies does not only emerge from the cluster vision and strategy: as the CDA develops a closer relationship with actors, it will become evident that are still certain gaps in her/his understanding of the cluster which need to be investigated together with the stakeholders in question.

The study is obviously not an academic one. Its focus on critical issues is intended as a basis for a strategy and an implementable action plan. Hence the important role of the CDA. By being involved in the collection of data, opinions, etc., he or she gets a good feel for the cluster, which will help in developing a strategy for implementation (selection of leaders and implementers, etc.) and managing the cluster building project. Since the approach stresses the creation of linkages, the diagnosis covers all stakeholders who can bring new ideas and initiatives into the cluster, not just enterprises.

4.5 The diagnostic study and trust building

The diagnostic study provides the CDA (and the study team) with a major opportunity to build trust with the cluster stakeholders. As this is the first formal interaction, the response of the stakeholders to the CDA will be to provide non-controversial data. The CDA should therefore not question too intensively to obtain information – it should be willingly revealed by the stakeholder. The objective at this stage is to make the stakeholder feel comfortable and to understand area(s)of major concern. At this stage, the CDA may also try to suggest possible solutions and seek the response of the stakeholder to these. This will create confidence between the stakeholder and the CDA.

4.6 Validation of Diagnostic Study

On completion of the diagnostic study, a draft of targets and possible areas of activities are identified. These activities must be cluster specific and should be mapable to the SWOT analysis. The findings of the diagnostic study are then presented by the team to the stakeholders. Here opinions are taken and the study is further modified. The interaction meet can be organised by the team or by a group/network of principal firms. The team should try to give ownership of the study to the stakeholders.

4.7 Diagnostic Study is a first step

Diagnostic study is the first step in understanding the cluster. As the level of trust increase between the CDA and various cluster stakeholders, more 'correct' information flows in. As more and more real issues emerge and leaders and followers for those issues get identified, need for detailed studies emerge. The continuous interaction not only gives a better understanding of the value chain, which can now (say after 6 months) be undertaken but also pinpoints exact needs for various detailed studies e.g. Marketing/technology/benchmark/BDS profiling etc. Based on this continuous flow of information, updating the diagnostic study is almost a continuous activity.

All sections to be edited as part edited text in hard copy called DS Part 3

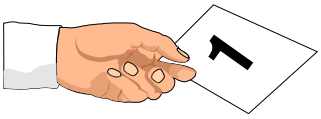

TOOL 1 - SME INTERVIEW FORMAT/VISIT REPORT

[If possible, start with a tour of the production/storage facilities of the enterprise, before proceeding with the discussions.]

[The notes in **boldface** indicate what information should be obtained about other parties (enterprises, institutions) that have significant business relations with the SSI being interviewed. This will give the team an opportunity to interview these other parties later on in the field interviews.]

1. Basic Information

Date of Visit:	
Name of Enterprise:	
Name/Position of Respondent:	(E.g. owner, partner, owner's son, director)
Location:	(To identify the premises; exact address not necessary, although it may be recorded if easily available)
Main Product (s):	
Estimated Employment:	(Including owners)
Estimated Total Investment:	(Exclude land/buildings rented by the enterprise; but include stocks and working capital)
Form of Organisation:	(Sole proprietorship, partnership, family enterprise, limited company, etc.)
Date Established:	Approximate: e.g. 1990 not 20 June 1990
Recent Development:	(For example, employment 3 years ago versus now; or

	major diversification into new products or markets)

2. Other Businesses

- What (if any) other businesses are owned or significantly partly owned by the owner(s) of the enterprise, whether in manufacturing or other sectors?

3. Markets and Marketing

- Where are the enterprise's main products sold: locally, elsewhere in the country, export markets? (Obtain volume and/or value percentages if possible, by main product or product-line)

- (If the enterprise is a relatively old one in terms of the cluster's history). How do its main products and markets differ significantly from those of its early days, or of local SMEs in the same general line of business, which were well established at that time?

- What are the main marketing channels used (directly to the public or to other enterprises: manufacturers, particularly other SMEs or large manufacturers in the cluster, agents, intermediary traders, exporters, etc.)? If to other enterprises, are they local, or do they have a local subsidiary? Is the pattern of marketing channels changing significantly, and if so how?

- What, apart from orders, do these channels consciously or involuntarily provide (general market intelligence, designs, market requirements, technical assistance, training, credit in money or materials, etc.)? Is the pattern of such provision changing, and if so how?

[Names/addresses of significant parties should be noted for possible subsequent interview.]

- Who are the enterprise's main competitors: other SMEs in the cluster, other enterprises within the country, importers (distinguish by main product/market if necessary)?

- What is the main product features used to attract customers (quality, constant upgrading or modification to customers' needs, assured/rapid delivery, advertising, price, etc.)? Is the emphasis shifting between these features, and if so how?

- What (if any) other aids to marketing and market intelligence has the enterprise found to be of significant use (joint marketing arrangements with other SMEs including order-sharing, process specialisation, sub-contracting programmes or schemes, use of private consultants, export promotion agencies, export credit)? How important are these aids? Are they becoming more important?

[Names/addresses of significant parties should be noted for possible subsequent interview.]

- What are the enterprise's main problems in marketing (selection/design/quality/prices of its products, transport costs, lack of export credit, deficient market intelligence/information, etc.)?

- Has the enterprise obtained effective help or advice in solving these problems, which is not already covered by answers to the above? If so, from whom (enterprises and/or institutions)? What was the nature of this help? How important was it? Is it still needed?

[Names/addresses of significant parties should be noted for possible subsequent interview.]

- Does the enterprise have reasonably firm and fundable plans for further upgrading or diversification of its markets, market access, and marketing channels and methods within the next two or three years? What is the essence of these plans? What sources of support (in the sense used above, including cooperation with other enterprises) does it envisage will be most useful? What, aside from funding limitations, will be the most important obstacles?

4. Premises

- Are the premises on an industrial estate or other real estate specifically designed for industrial use? If yes, who is the developer (small industry agency, local authority, SSI association, private party, etc.)? Are the buildings pre-built by the developer, or is only serviced land provided? Are any parallel services provided (telecommunications, electricity) by the developer?

- Are the premises rented or owned? If rented, from a public or a private landlord?

- Are the premises 'formal' or 'informal' (ramshackle, temporary, etc.)?

5. Production, Technology, Training, Labour

- What is the source of most machines? What is their approximate average age?

- Whose advice did the enterprise take in selecting them?

- What are the principal sources of parts, servicing and repairs (including self-servicing by the enterprise itself)? Are these sources within or close to the cluster? Are they general mechanics/dealers, or specialists in these types of equipment?

- What are the main problems (if any) with the production equipment or with the processes of production?

- Has the enterprise maintained, right up to the present, a record of upgrading/diversifying its products and/or processes? What are the major (or typical) examples of this?

- In those examples where which parties did it receive support (ideas/impetus/know-how/assistance/cooperation): its own skilled employees, suppliers, other SMEs, large manufacturers sub-contracting work, other external buyers such as export-agents and large traders, export promotion agencies, local R&D or technical institutes, etc? What was the nature of this support (designs, materials, advice on equipment and processes, training, etc.)? Was it mostly incidental, or deliberately conceived? How, if at all, was it paid for by the enterprise? Are there any trends in the pattern of upgrading and its support - is it becoming more continuous and deliberate?

[If other enterprises or institutions, including consortia of same, and enterprise associations, have played a significant role, their names and (if necessary) addresses should be noted, so that they may be interviewed for their side of the story.]

- Does the enterprise specialize (in whole or part) in one or two stages of a production process? Does it rely for supplies on other SMEs? How did the specialization develop? Is it becoming more intense and important?

[N.B. Where specialization is significant, the names and addresses of customers or specialist suppliers (including common service facilities) should be noted, so that they may be interviewed for their side of the story.]

- Where did the owners and employees receive their basic *useful* training (on the job/in former jobs/from public or private training or educational establishments)?

- Has the enterprise maintained, right up to the present, a record of upgrading the skills of its workforce, whether owners or employees? What are the major or typical examples of this?

- From which parties did it receive support in upgrading skills?

[Repeat, with appropriate adjustments, the line of questioning above about product/process upgrading, including the noting of names and addresses of significant enterprises/institutions for possible subsequent interview.]

- Are there significant problems with the skills and training of the enterprise's workforce? Which

- Are any other significant learning/technology upgrading mechanisms used by the enterprise (e.g. use of private consultants or engineers, consultative meetings or learning groups of SSI owners, trade publications, public or common testing or design facilities?)? If so, what are their main uses, and how important are they to the enterprise? How did they originate, and how are they currently organised?

[Again, names/addresses of significant parties should be noted for possible subsequent interview.]

- Does the enterprise have reasonably firm and fundable plans for further upgrading or diversification of products, processes, equipment, or skills within the next two or three years? What is their essence? What sources of support (including cooperation with other enterprises) does it envisage will be most useful? What, aside from funding limitations, will be the most important obstacles?

6. Raw Materials and Intermediate Goods

- What are the principal customary sources for the main raw materials and intermediate goods used by the enterprise? Are many of these sources within or close to the cluster?

- If they are traders, are they general dealers or specialists in these materials who can and do offer useful advice on their choice and use?

- If they are manufacturers (large or small), do they similarly provide useful advice and/or technical assistance on the choice and use of their products? What is the nature of this technical support? Is it increasing in quality and importance?

[Names/addresses of significant parties - in this instance, suppliers - should be noted for possible subsequent interview.]

- Does the enterprise have any substantial problems with its supplies of raw materials or intermediate goods? If yes, what are they?
- Has the enterprise obtained effective help or advice in solving these problems, which is not already covered by the responses to the lines of enquiry above? From whom (enterprises or institutions)? What was the nature of this help? How important was it? Is it still needed?

[Names/ addresses of significant parties should be noted for possible subsequent interview.]

7. Finance

- How was the enterprise funded (owners' savings, profits of the owners' other enterprises, family members, enterprise inherited from father or mother, etc.)?

- Apart from short-term trade credit from suppliers or customers, has the enterprise received other external credit?

- If so, when? From whom (bank or finance company, equipment supplier, joint venture partner, savings club, etc.)? Overdraft facility or term loan? Interest rate? Size of loan or credit-limit? Date of most recent credit? Did the enterprise use services of any party, institutional or private, in securing external credit?

[Names/addresses of significant parties, including credit sources themselves, should be noted for possible subsequent interview.]

- Is the enterprise generating a surplus over costs, including a living income for the owners and their immediate dependants? In real (inflation-adjusted) terms is this profit increasing or decreasing? Why?

- Where do the owners (intend to) invest the bulk of the surpluses? In expanding this enterprise? If so, in what manner? In other enterprises? If so, in which sectors? In other types of investments (land, houses and other buildings, financial instruments, etc.)? What is the reason for this investment pattern (in the enterprise/in other investments)?

- What (if any) are the enterprise's main problems with sources and terms of either equity or credit finance?

8. Infrastructure, Policies, Regulations, etc.

- What are the principal customary sources for the main infrastructural facilities and services used by the enterprise (electricity, telecommunications, water, gas, transport facilities, waste disposal and effluent treatment, etc.)?

- Whether or not these primary sources are publicly owned or regulated utilities, has the enterprise supplemented them in any significant way by itself, through cooperation with other SMEs, or through the services of specialist private initiatives (e.g. building/improving access roads, electricity from private stand-alone generators, common waste disposal services, common fax or other communications facilities)? How was this financed and organized? How long have they been operating?

[Names/addresses of significant parties - in this instance, service-suppliers - should be noted for possible subsequent interview.]

- Does the enterprise still have any substantial infrastructural problems? If yes, describe the most serious problems.

Does the enterprise have any substantial problems with laws and regulations (licenses, tax law and administration, contract/sale/damages law, land titles and access, zoning and building development regulations, import policies and tariffs, safety and labour regulations, work permits for non-nationals, laws on acceptable loan-collateral, etc.)? If yes, describe the most serious problems.

- Where has the enterprise obtained effective help or advice (if any) in solving these problems (e.g. consultation and advice from private consultants/professionals or local officials, representations by SSI associations or other institutions)?

[Names/addresses of significant parties - in this instance, sources of advice/help - should be noted for possible subsequent interview.]

9. Associations

- Is the enterprise a member of business associations? Which (e.g. Chamber of Commerce and Industry, Garment Exporters' Association, small metal workers' association, local block or precinct trade association, etc.)? Since when?

What effective help or services has the enterprise received, and in what fields *(under any or all of the above headings)*, from any of these associations, whether acting independently or in cooperation with other institutions? How are these services financed and organized (e.g. are they made available to SMEs individually, or in groups)? Was this help of decisive importance? Is it becoming more important? Should and/or could it be further improved? How?

[Names/addresses of significant parties - in this instance, associations and any institutional partners cooperating with them - should be noted for possible subsequent interview.]

10. Recapitulation/Summary of Main Problems and Strategy of the Enterprise

- Recapitulate - very briefly, in a single short phrase per problem - the *three* main problems of the enterprise (if it has any main problems), as seen by the interviewer.

- These problems may be among those noted by the enterprise itself, or by the interviewer but not by the enterprise (e.g. poor management, disputes between the owners, no skilled floor supervisors, etc.)

- Summarize, in *two to three* lines, the enterprise's core competitive *strategy* and strengths, and its most valuable interactions with other parties in the cluster (e.g. technical excellence and upgrading, market diversification, specialisation, low costs/prices, using other enterprises for specialised job-work, producing for distant markets via large buyers, etc.).

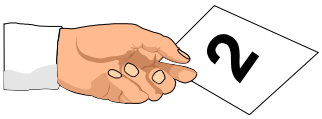

TOOL 2 - RELATED SME UNITS/ LARGE MANUFACTURER INTERVIEW FORMAT/VISIT REPORT

[If possible, start with a tour of the production/storage facilities of the enterprise, before proceeding with the discussions.]

[The notes in **boldface** indicate what information should be obtained about other parties (enterprises, institutions) that have significant business relations with the SSI being interviewed. This will give the team an opportunity to interview these other parties later on in the field interviews.]

1. Basic Information

Date of visit:	
Name of Manufacturer:	
Name/Position of Respondent:	(e.g. General Manager, Purchasing Manager, etc)
Location:	(To identify the premises; exact address/telephone number not obligatory, though it will usually be readily available and should be recorded if available)
Main Product (s):	
Main Markets	
Estimated Value of Total Sales:	
Estimated Employment:	
Approximate Total Investment:	(Exclude land/buildings not owned by the enterprise; but include stocks, and working capital generally)
Team's Impression of Enterprise's Technology:	(High, medium, basic)
Form of Organization:	(Family enterprise, limited company, public enterprise)
Date Established:	(Approximate: e.g. 1986 not 19 August 1986)
Recent Development:	(For example: employment or investment 3 years ago, versus now; or major diversification into new products or markets).
Other Businesses Owned or Part-owned	(In manufacturing, or other sectors; specify sub-sectors as far as possible)

2. Business Relations with SMEs in the Cluster

[It may be appropriate to start discussion with reference to comments by SMEs on their relations with the enterprise; enquire how the enterprise itself sees these relations; and let the discussion flow from that point. This will be a useful tactic, and will also provide the advantage of specifically cross-checking the SMEs' remarks. However, the primary purpose of the interview is to discuss the topics below, insofar as they are relevant to this particular large manufacturer.]

What is the basic business orientation of the enterprise vis-à-vis the SMEs in the cluster (customer, supplier, technical partner)?

If supplier

- What are the main items supplied to the SMEs?
- Is this business expanding/diversifying?
- How did it start, and how long has it been going on? What is its total sales value now?
- Along with the core items supplied, what else is supplied (service, parts, advice, training, technical assistance, credit, etc.?)? Are these "supplements" paid separately by the SMEs?
- What, if anything, have the SMEs learnt - whether directly from the enterprise, or subsequently by diffusion among themselves - from this business relation: has it helped them expand, diversify, upgrade, increase their productivity, etc.?

If customer/technical partner

- What are the main items and/or services sourced from the SMEs?
- What is the main motivation for such sourcing (low costs, local supply, convenience, save on enterprise's own investment, high quality, special SSI capabilities, etc.)?
- How did it start, and how long has it been going on?
- What is the annual total value of purchases now?
- How is the business relation organized (enterprise-enterprise business, with small groups of SMEs, via SSI association or sub-contracting exchange)?
- How many SMEs in total are significantly involved?
- Along with the orders placed by the enterprise, what else, if anything is provided (designs, advice, training, equipment, technical assistance, materials, credit, etc.?)? Are any of these "supplements" (partly) paid the SMEs?
- What are the main problems experienced with sourcing from the SMEs, and how have they been/are they being solved?

In either case (i.e. supplier or customer/technical partner)

- Has there been any significant involvement of, or impact from, other parties in the development and conduct of the business relation, which is not covered by the responses to the above (government via taxation, local content, etc., policies; intermediary enterprises or agents, training or technical institutes, banks, local authorities, training levy boards, etc.)?
- What has been the nature of the involvement(s) or impact(s) has it been positive or negative, and is it becoming stronger of weaker?
- What can be done to intensify support or minimize hindrance? If better support implies deployment of more resources, where would these come from?

[Names/addresses of significant parties should be noted for possible subsequent interview.]

Does the enterprise have reasonably firm plans for further expansion/upgrading/diversification of its business relations with the SMEs in the cluster or network within the next two or three years? What is their essence?

- Do these plans involve cooperation with third parties; and if so, which and how?

3. Recapitulation/Summary of Main Relations with SMEs and Strategy of the Enterprise

- Recapitulate - very briefly - *up to three* main types of relation of the enterprise with SMEs in the cluster or network (WHY ALL AT ONCE NETWORK???), together with the enterprise's core motive for maintaining (each of) these relations, as seen by the interviewer.

- Summarize, in *two to three* lines, the enterprise's core competitive strategy, including relations with other parties (e.g. technical excellence and upgrading, market diversification, specialisation on core functions, low costs/prices, cooperation with other enterprises, etc.)

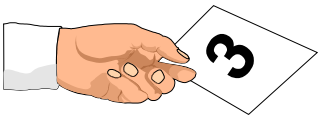

TOOL 3 - SME ASSOCIATION INTERVIEW FORMAT/VISIT REPORT

1. Basic Information

Date of visit:	
Name of Association:	
Name/Position of Respondent:	(e.g. President, Gen. Manager, Exec. Director, etc.)
Location:	(To identify the premises; exact address/telephone number not obligatory, although it may be recorded if easily available)
Sectoral and Geographical Coverage:	(E.g. metal working SMEs in ___ City; National Small Garment Exporters Association)
Estimated No of SSI Members:	
Estimated No. of Other Members:	
Estimated No. of Paid Staff:	(Full time, part time)
Estimated No. of Unpaid but Active Officials:	(Exclude simple Board Members, Sub-committee Members, etc. if their activities do not extend beyond periodic attendance of meetings)
Approximate Annual Revenues:	(From all sources: specify main ones if possible)
Approximate Total Assets:	(Land, buildings, equipment, vehicles, working funds)
Form of Organisation:	(Chartered, charitable, informal, etc)
Date Established:	(Approximate: e.g. 1988 not 2 April 1988)
Recent Development:	(E.g. membership 3 years ago, versus now)

2. Business Relations with and Services to SMEs in the Cluster

[It may be appropriate to initiate discussion with reference to comments by SMEs on their relations with the association, services provided by it, etc.; enquire how the Association itself sees these relations and services; and let the discussion flow from that point. This will be a useful tactic, and will also provide the advantage of specifically cross-checking the SMEs' remarks. However, the primary purpose of the interview is to discuss the topics below, insofar as they are relevant to this association.]

What are the main services the association provides to the SMEs in the cluster?

Production, Technology, and Training

- Common service facilities (specialist production; testing)

- Information and/or training on new technologies/processes
- Providing consultancy or R&D facilities
- Technical skills upgrading
- Business and management training

Markets and Marketing

- Arranging contacts with large manufacturers/buyers
- Securing and allocating orders from these
- Providing new designs or information on design sources
- Providing market information, e.g. export requirements, subcontracting exchanges

Infrastructure

- Negotiating for land access, industrial estate sites, etc.
- Providing or arranging for premises or serviced land
- Providing or arranging other common services (waste disposal, telecommunications, electricity, etc.)

Finance

- Promoting and/or managing savings and loans programmes
- Helping with credit applications to banks, etc.
- Providing credit guarantees

Other

- Bulk purchasing
- Business consultancy, help with business plans, etc.
- Meetings with national and local governments on policy issues (taxation, protection under contracts, zoning, electricity supply, tariffs, etc.)

Concentrating on the main effective services, as perceived by the SSI informants themselves and/or the interviewer, for each such service:

- How did it start and develop, and how long has it been going on?
- How many (a) SSI members (b) other SMEs in the cluster use it regularly?

- How do they pay for it (if they do)? Does it, overall, pay for itself?
- In providing services, does the association work with other actors (e.g. large enterprises, training or technical institutes, government)? And if so, how (technically, financially, etc.)?
- What are the main problems, if any, associated with the service (technical, financial, logistical, organizational)?
- Do the customers have suggestions for upgrading or expanding the service? If so, which? Are they realistic?
- Have any private enterprises started providing similar services, prompted by the association's example?

[Names/addresses of significant other parties should be noted for possible subsequent interview.]

- Does the association have literature (brochures, periodic or special reports, videos, etc.) providing further information on any of these main services, or on their extent and impact?

[If so, take or borrow copies to provide further input to the cluster diagnosis]

- Does the association have reasonably firm and fundable plans for further expansion/upgrading/diversification of its services to the SMEs in the cluster or network within the next two or three years? What is their essence?

- Do these plans involve cooperation with third parties; if so, which and how?

3. Recapitulation/Summary of the Main SSI Services and Strategy of the Association

- Recapitulate very briefly the 3 main types of services provided to SMEs in the cluster, together with the association's basic strategy for those activities and any main problem in providing them, as seen by the interviewer.